Operating instructions

METTLER TOLEDO MultiRange
Table and stand scales

MA15s/MA30s
MB60/MCC150/MCC300

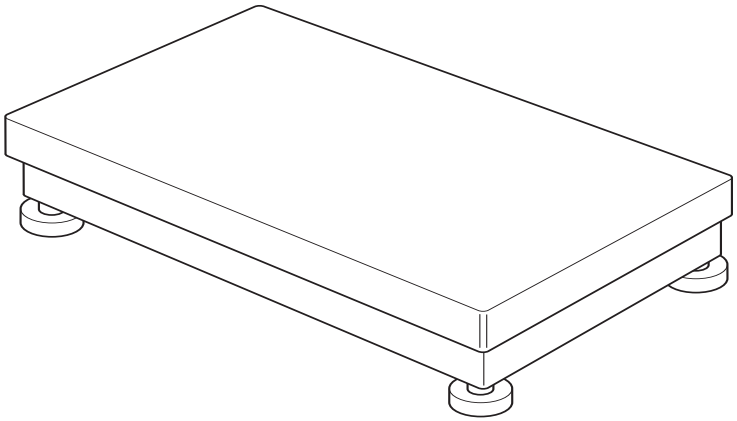

www.mt.com/support

Contents

1 General information 4

2 Safety precautions 4

3 Equipotential bonding 5

4 Operating limits 6

5 Cleaning the weighing platform 7

5.1 Notes on cleaning 7

5.2 Subsequent treatment 8

5.3 Cleaning the measuring cell 8

5.4 Removing and replacing the load plate at MCC weighing platforms 8

6 Standard accessories 9

7 Technical data 11

8 Disposal 11

1 General information

The weighing platform is part of a modular system. The associated components, such as terminals, application pacs and the extensive range of accessories, allow you to assemble a weighing system ideally tailored to the needs of your operation.

2 Safety precautions

▲ The explosion-protected weighing platform is approved for operation in Zone 2 (gases) and Zone 22 (dusts) hazardous areas. There is an increased danger of injuries and damage when using the weighing platform in hazardous areas! Exercise particular care when using in such areas. The rules for behaviour are based on the concept of "Safe Distribution" established by METTLER TOLEDO.

▲ Explosion-protected weighing platforms may be used in hazardous areas of Zones 2 and 22 only in conjunction with weighing terminals that have the appropriate approval and interface specification.

▲ The connection cable may not be separated from the weighing terminal while it is energised.

▲ Tighten the knurled nut of the IDNet connection cable with 10 Nm of force.

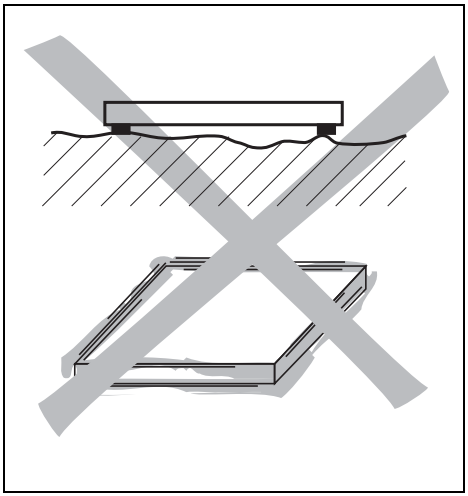

Selecting installation location

▲ The foundation must be capable of safely support the weight of the weighing platform at its support points when it carries the maximum load. At the same time, it should be so stable that no vibrations occur during weighing operations. These requirements also apply when the weighing platform is integrated in conveying systems and the like.

▲ Ensure that vibrations due to machines near the installation site are kept to a minimum.

▲ Ensure that there are no drafts at the installation site.

Ambient conditions

▲ Use powder-coated/enamelled weighing platforms only in a dry environment.

▲ In a damp environment, in wet operation or when working with chemicals: use stainless-steel or hot-galvanised weighing platforms.

3 Equipotential bonding

The equipotential bonding must be installed by a professional electrician when using the weighing platform in Zones 2 and 22. METTLER TOLEDO Service only has a monitoring and consulting function here.

➜ Connect equipotential bonding (PA) of all devices (weighing platform and service terminal) in accordance with the country-specific regulations and standards. In the process, make sure that all device housings are connected to the same potential via the PA terminals.

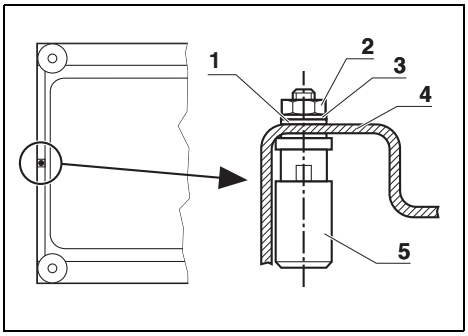

Equipotential bonding with MA...

(1) Serrated lock washer A 4.3 DIN 6798
(2) Hexagonal lock nut M4 DIN 934
(3) Washer 4.3 DIN 125
(4) Base frame
(5) Equipotential bonding clamp

Mounting materials are enclosed with the IND690xx, IND4x9xx and IND560 weighing terminals.

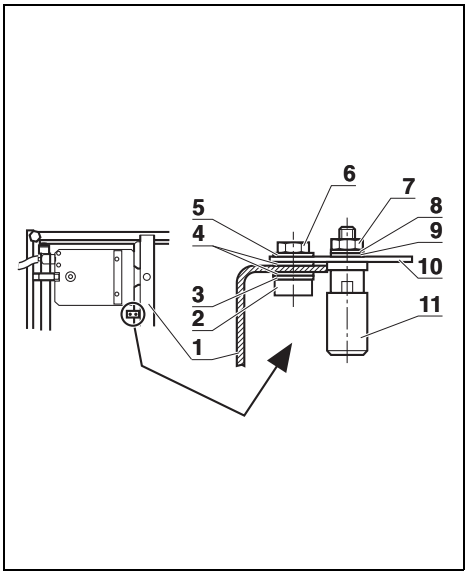

Equipotential bonding with MB..., MCC...

(1) Frame body
(2) Fillister head screw M5x12 DIN 912
(3) Washer 5.3 DIN 125
(4) Serrated lock washer 5.3 DIN 6798
(5) Washer 5.3 DIN 125
(6) Hexagonal lock nut M5 DIN 934
(7) Hexagonal lock nut M4 DIN 934
(8) Washer 4.3 DIN 125
(9) Serrated lock washer A 4.3 DIN 6798
(10) Potential plate weighing platform
(11) Equipotential bonding clamp

Mounting materials are enclosed with the IND690xx, IND4x9xx and IND560 weighing terminals.

4 Operating limits

The weighing platform has such a rugged design that no damage should result if the maximum weighing capacity is occasionally exceeded.

The static load-bearing capacity, i.e. the maximum permissible load, is dependent on the type of loading (Positions A – C).

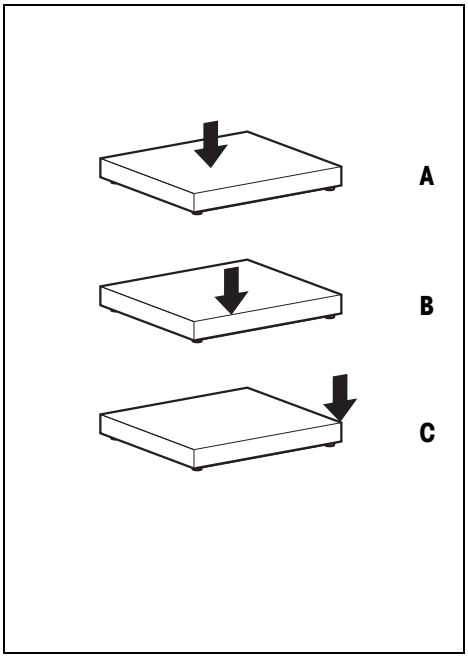

Maximum permissible load

	MA15s	MA30s
A	50 kg	50 kg
B	40 kg	40 kg
C	30 kg	30 kg

	MB60	MCC150 MCC300
A	120 kg	500 kg
B	80 kg	300 kg
C	40 kg	150 kg

A with central load

B with side load

C with one-sided corner load

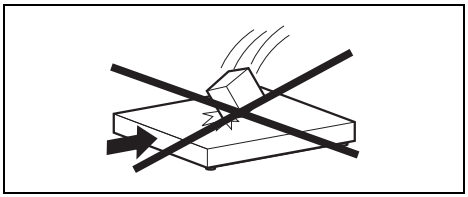

▲ Falling loads, shocks and lateral impacts must be avoided.

5 Cleaning the weighing platform

Maintenance of the weighing platform is limited to regular cleaning and subsequent oiling. The procedure depends both on the type of surface (powder-coated/enamelled or stainless steel) and on the environmental conditions prevailing at the installation location. Remove dirt and deposits at regular intervals from the outside and inside of the weighing platform.

5.1 Notes on cleaning

CAUTION

Incorrect use of cleaning agents may cause damage to the weighing platform!

▲ Use only such cleaning agents that do not act on the plastics used in the weighing platform.

▲ Be particularly careful when cleaning the measuring cell.

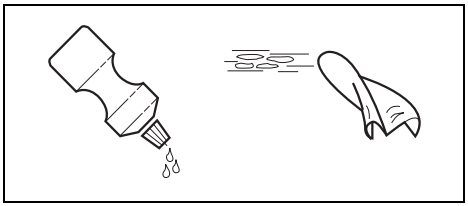

Powder-coated/enamelled version, dry surroundings

- Wipe with a damp cloth.
- Use household cleaning agents.

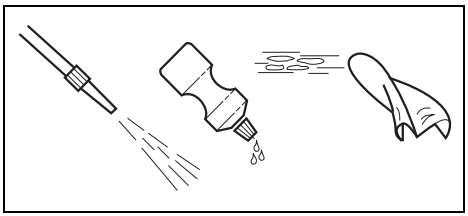

Stainless-steel and hot-galvanised versions

- Wipe with a damp cloth.
- Water jet up to 60 °C.
- Use household cleaning agents.

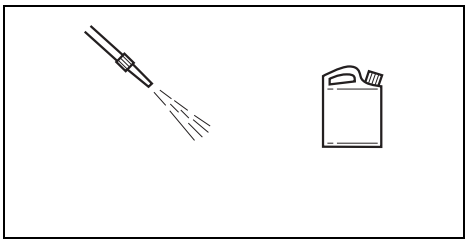

Corrosive surroundings

- Water jet up to 60 °C.
- Remove corrosive substances at regular intervals.
- Only use disinfectants and cleaning agents in accordance with the manufacturer's specifications and instructions.

5.2 Subsequent treatment

Carry out the following subsequent treatment in order to protect the weighing platform:

- Rinse the weighing platform with clear water.
- Dry off the weighing platform with a lint-free cloth.
- Treat the inside and outside of the weighing platform with an oil suitable for foodstuffs.

5.3 Cleaning the measuring cell

The load plate has to be removed in order to clean the measuring cell. Please refer to the next section for MCC weighing platforms.

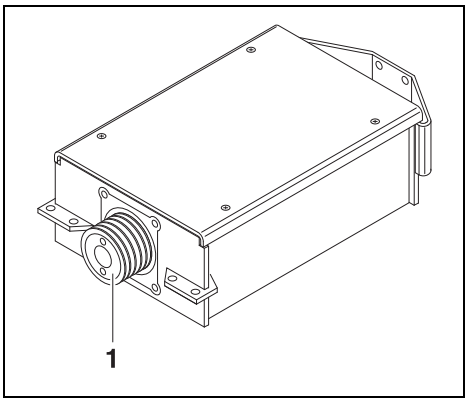

CAUTION

The measuring cell can be damaged!

- During cleaning work, never touch, direct an airflow against or spray the rubber diaphragm (1) of the measuring cell.
- Blow out dirt or flush with a medium-power water jet.

5.4 Removing and replacing the load plate at MCC weighing platforms

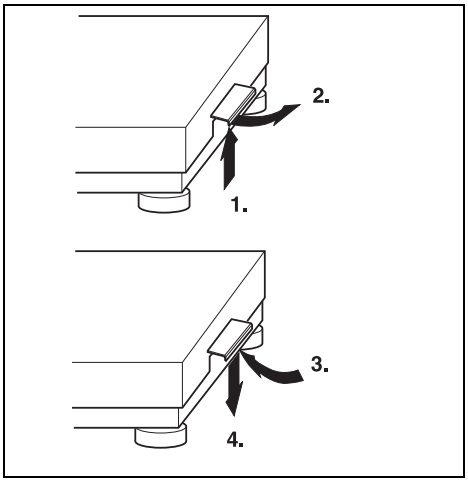

Removing the load plate

- Remove the load plate by lifting the two side handles vertically (1.) and pivoting outward (2.).

Replacing the load plate

- After mounting the load plate, swing the handles inward (3.) and reengage in initial position (4.), i.e. the handles must be in the bottom position and vertical.

When the handles are correctly engaged, it should not be possible to lift off the load plate.

6 Standard accessories

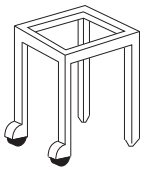

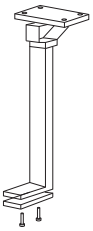

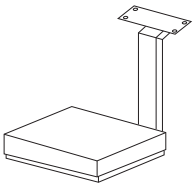

Order No.

Stand

Rigid frame construction
2 feet with casters
1 fixed foot with screw adjustment
height approx. 560 mm

for MB60	
powder-coated/enamelled	00 503 631
stainless steel	00 503 632
for MCC150, MCC300	
powder-coated/enamelled	00 504 853
stainless steel	00 504 854

Pillar support

for MB60, MCC150, MCC300
for mounting terminals on stand,
incl. fastenings

for ID-terminals	
powder-coated/enamelled	00 504 127
stainless steel	00 504 128
for IND4x9	
stainless steel	22 014 835

Scale stand

for MA15s, MA30s, MB60
for mounting terminals on the
weighing platform,
all stainless steel

for ID terminals	00 504 439
for IND4x9	22 014 836

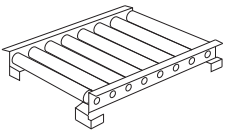

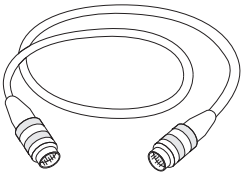

max.
95 m

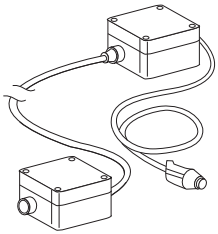

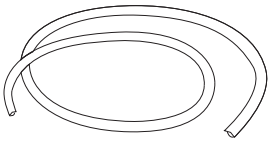

Order No.

Roller track

Steel-clad rollers with rust protection, lengthwise motion

for dry surroundings

for MB60 (8 rollers)	00 503 640
for MCC150, MCC300 (9 rollers)	00 504 852

for wet surroundings

for MB60 (8 rollers)	22 001 647
for MCC150, MCC300 (9 rollers)	22 001 648

Extension cable 00 504 134

Length 10 m, connector at both ends
for remote setup of ID terminal

Cable adapter kit for ID terminals 00 504 133

for extending connection cable to 100 m
comprising two junction boxes
Box at terminal end with connection cable of 2.5 m length

Special cable from the roll 00 504 177

used with adapter kit for ID terminals for extension of connection cable to required length

7 Technical data

Types of measuring cells	M22, M45
Ignition protection type	II 3G Ex nAc II T6
	$-10\ °C \leq T_a \leq +40\ °C$
	II 3D Ex tc IIIC IP67 T50 °C
	The following safety-related variables must be ensured by the connected weighing terminal:
	Supply circuit $U_{max} \leq 20$ V DC
	Interface circuit $U_{max, CL} \leq 27$ V DC
	$I_{max, CL} \leq 30$ mA
IP protection type	IP67
Power consumption	12 V DC ± 20 %; 125 mA; 1.8 VA

8 Disposal



In conformance with the European Directive 2002/96 EC on Waste Electrical and Electronic Equipment (WEEE) this device may not be disposed of in domestic waste.
This also applies to countries outside the EU, per their specific requirements.

➜ Please dispose of this product in accordance with local regulations at the collecting point specified for electrical and electronic equipment.

If you have any questions, please contact the responsible authority or the distributor from which you purchased this device.
Should this device be passed on to other parties (for private or professional use), the content of this regulation must also be related.
Thank you for your contribution to environmental protection.

ServiceXXL

Tailored Services

Congratulations on choosing the quality and precision of METTLER TOLEDO. Proper use according to this Operating Manual and regular calibration and maintenance by our factory-trained service team ensure dependable and accurate operation, protecting your investment. Contact us about a ServiceXXL agreement tailored to your needs and budget.

We invite you to register your product at www.mt.com/productregistration so we can contact you about enhancements, updates and important notifications concerning your product.



22006480C

Subject to technical changes © Mettler-Toledo (Albstadt) GmbH 01/10 Printed in Germany 22006480C

Mettler-Toledo (Albstadt) GmbH
D-72458 Albstadt
Tel. ++49-7431-14 0, Fax ++49-7431-14 232
Internet: http://www.mt.com